Selling and Buying the Brooklyn Bridge: Lessons Learned from M&A Due Diligence

April 9, 2019

Daniel Meier, JD, CHC
Partner
Benesch, Friedlander, Coplan & Aronoff LLP
(212) 488-1013
dmeier@beneschlaw.com

Regina F. Gurvich, MBA, CHC, CHPC
Vice President, Chief Compliance Officer
OMNI Opthalmic Management Consultants
(732) 510-2588
Regina.Gurvich@OOMC.com

Part I: Legal gymnastics of the deal, including structuring within Corporate Practice of Medicine, regulatory compliance, and due diligence across multi-specialty / multi-state acquisitions

Daniel Meier, JD, CHC
Benesch, Friedlander, Coplan & Aronoff LLP
(210) 488-1013
dmeier@beneschlaw.com

www.beneschlaw.com

Benesch

AGENDA

- Legal gymnastics of the deal, including structuring within Corporate Practice of Medicine, regulatory compliance, and due diligence across multi-specialty/ multi-state acquisitions.
- Translating due diligence findings into an action plan for an effective, centralized compliance program and a scalable framework for future acquisitions.
- Lessons learned from successes and fiascos, actionable pointers, and a few tools to make it all work.

Benesch

3

Overview of Regulatory Considerations in Healthcare M&A, Pre- and Post-Closing

- Pre-Closing Structuring
  - Corporate practice of medicine implications - reorganization
- Post-Closing Considerations - The deal closed, now what?
  - CPOM compliance and enforcement
  - Licensing implications
  - HIPAA
  - Stark Law
  - Anti-Kickback Statute
  - Benefits & employment

Benesch

4

Regulatory Considerations in Healthcare M&A: Corporate Practice of Medicine (CPOM)

Structuring

- Corporate Practice of Medicine
  - Restrictions Vary by State
- Review:
  - Ownership of Entities
  - Professional Employment Agreements
  - Management Service Organization Agreements

Benesch

5

Regulatory Considerations in Healthcare M&A: Corporate Practice of Medicine

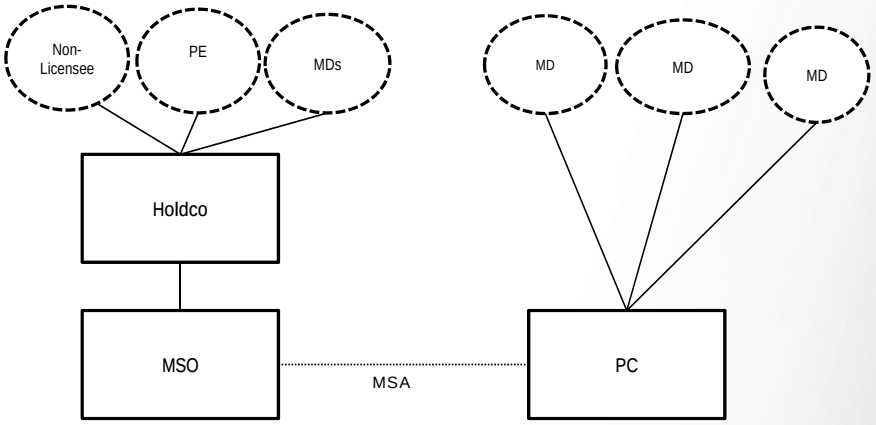

Benesch

6

M&A Consideration: CPOM
Structure Discovered During Diligence

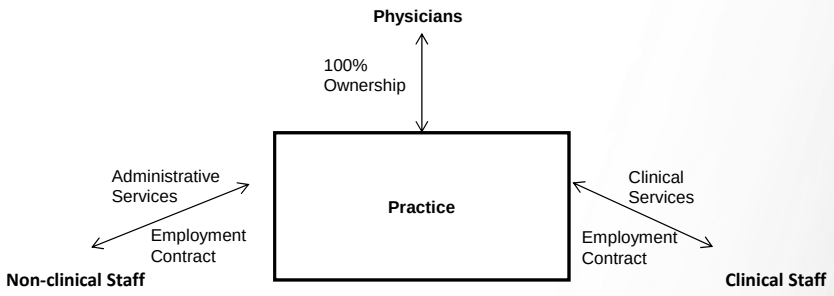

Benesch

M&A Consideration: CPOM
Pre-Closing Step 1: Diligence Restructuring

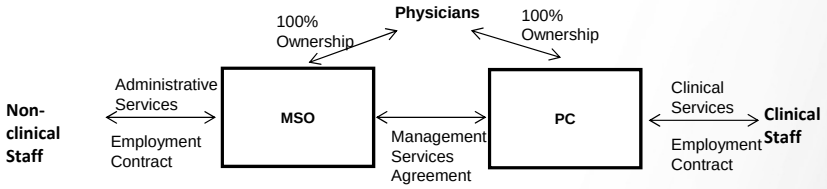

- Prior to the anticipated closing date, physicians create an MSO entity (sister or subsidiary). The MSO entity can purchase the assets, assume the leases of the professional entity ("PC"), and become the employer of MSO's non-clinical personnel.

Benesch

M&A Consideration: CPOM
Pre-Closing Step 1: Restructuring (Con't)

- PC will enter into a management services agreement ("MSA") with MSO. Under the MSA, MSO will provide management and administrative services
- Lengthy term
- PC's limited ability to terminate MSA
- Restrictive covenants for PC and clinicians
- Management fee:
  - % of Revenue
  - Reimburseable Expenses (cost-plus)
  - Set monthly or annual (depending on any fee splitting prohibitions).
- MSO cannot control the clinical practice nor interfere with the clinical practice.

Benesch

M&A Consideration: CPOM
Step 2: Buyer Acquires An Interest In MSO

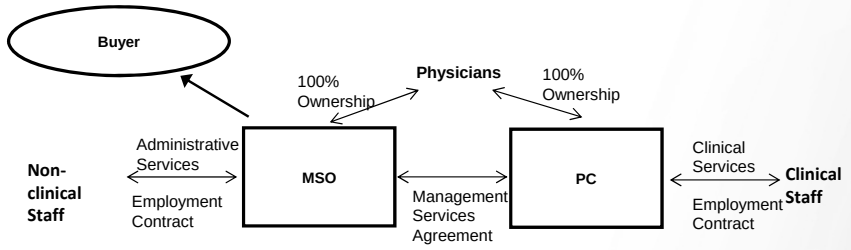

- Buyer acquires an interest in MSO for cash, an entity which owns hard assets, employs non-clinical staff, holds space and equipment leases and has a management services agreement with PC.

Benesch

M&A Consideration: CPOM Final Structure

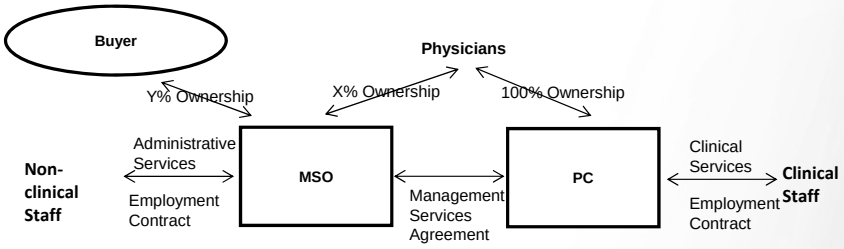

- Ownership of MSO by buyer and/or by physicians to be determined by the parties.

Benesch

M&A Consideration: CPOM Final Structure (Con't)

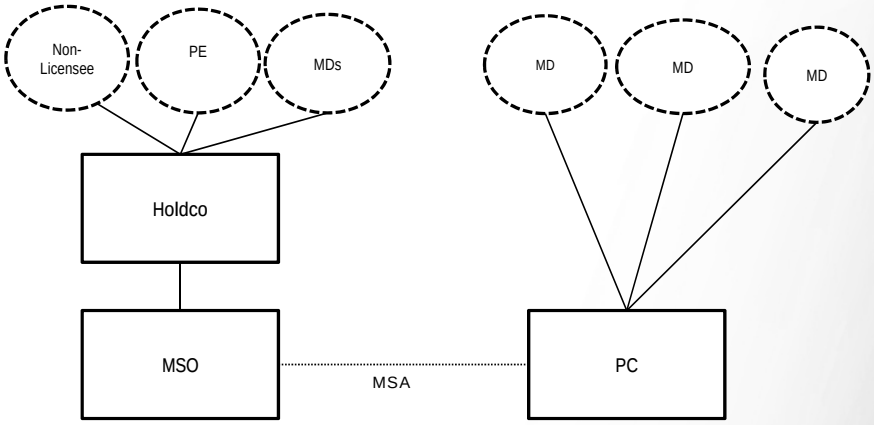

Benesch

M&A Consideration: CPOM Multi-State Arrangements

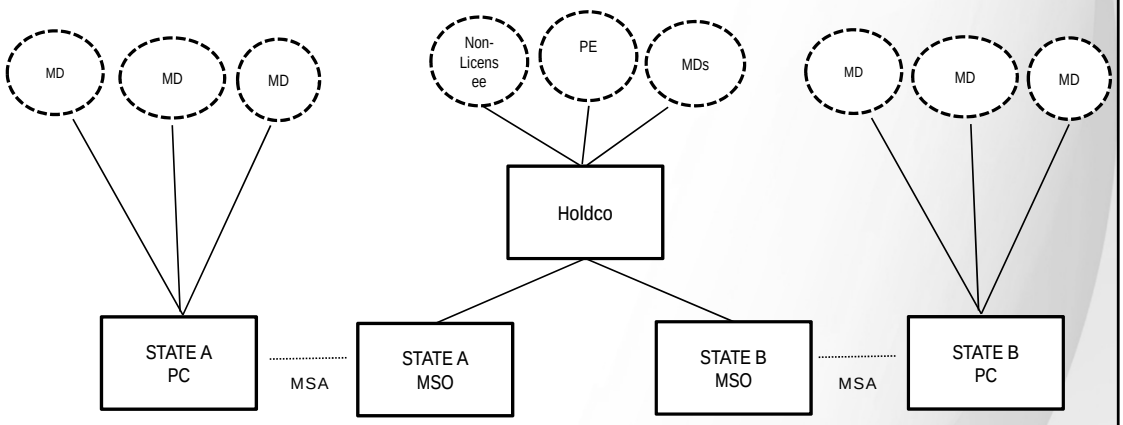

Benesch

13

M&A: The Deal Closed, Now What? CPOM Compliance and Enforcement

Enforcement of CPOM Violations

- Critical to maintain corporate formalities and comply with MSA
  - Aspen Dental (NY AG, June 2015)
  - *Allstate Insurance Co. v. Northfield Medical Center* (NJ, May 2017)
- OIG High Risk - Heightened Scrutiny List
  - ImmediaDent of Indiana, LLC & Samson Dental Partners, LLC (Nov. 2018)
    - Pre-requisite to compliance with Indiana's Medicaid program requirements was compliance with the law and regulations governing the practice of dentistry, including those requiring dentistry to only be practiced by licensed professionals

Benesch

14

M&A: The Deal Closed, Now What? CPOM Licensing

- Professional board licensing and PC ownership requirements
- State facility licensing implications
  - Licensee ownership may avoid facility license

Benesch

15

M&A: The Deal Closed, Now What? HIPAA

Which entities have what access to protected health information?

- MSO - PC
  - Business Associate Agreement
  - New HIPAA Policies and Procedures for both entity types
  - New Training
- Relationship between PCs
  - Common ownership
  - Affiliated Covered Entities (ACEs)
  - Treatment

Benesch

16

M&A: The Deal Closed, Now What?
Stark Law

- Is the PC a "Group Practice" - how to maintain the group practices
  - How many DHS entities
  - Physicians in the group practice - direct contract
  - Range of care
  - Substantially all test
  - Distribution of expenses and income
  - Volume / value of referrals
  - In office ancillary services (IOAS)

Benesch

17

M&A: The Deal Closed, Now What?
Anti-Kickback Statute

- Employment arrangements
  - Relationship and compensation arrangements between MSO and PC
- Earnout / Deferred Compensation
  - Former owners stay on in any capacity
  - Earn-out structure - PC or MSO
  - Compensation in connection with value or volume of referrals
    - Flat fee or percentage
    - Related to income driven by patient revenue
    - Cap, determination of actual value, patient revenue unrelated to those impacted by earn-out

Benesch

18

M&A: The Deal Closed, Now What? Anti-Kickback Statute

Marketing arrangements

- Safeguards
  - W-2 or 1099
  - Eligibility determinations
  - Structure and size of incentive compensation
  - Compliance department oversight
  - Repercussions for improper behavior

Benesch

19

M&A: The Deal Closed, Now What? Anti-Kickback Statute

Marketing arrangements (Con't)

- *U.S. ex rel. Medrano and Lopez v. Diabetic Care Rx, LLC dba Patient Care America, et al.*, No. 15-CV-62617 (S.D. Fla 2015)
  - PE firm added to DOJ complaint regarding kickback / FCA allegations
  - Commissions to independent marketers for compounding reimbursed by Tricare

Benesch

20

M&A: The Deal Closed, Now What? Benefit and Employment Considerations

- Retirees, promotions and new clinicians
- Benefit plans for PC and MSO
  - PC clinicians that are not employed by MSO cannot be on MSO benefit plans
- Professional employer organization (PEO)
  - Regulatory carve-outs for licensure purposes
  - MSO or third-party as PEO

Benesch

21

M&A Healthcare Considerations Takeaways

- Regulatory and operational due diligence is key
- Comply with planned regulatory safeguards
- Keep parameters in mind as new roll-ups continue or unwind

Benesch

22

PART II: TRANSLATING DUE DILIGENCE FINDINGS INTO AN ACTION PLAN FOR AN EFFECTIVE, CENTRALIZED COMPLIANCE PROGRAM AND A SCALABLE FRAMEWORK FOR FUTURE ACQUISITIONS

REGINA F. GURVICH , MBA, CHC, CHPC
CCO, OMNI OPHTHALMIC MANAGEMENT CONSULTANTS

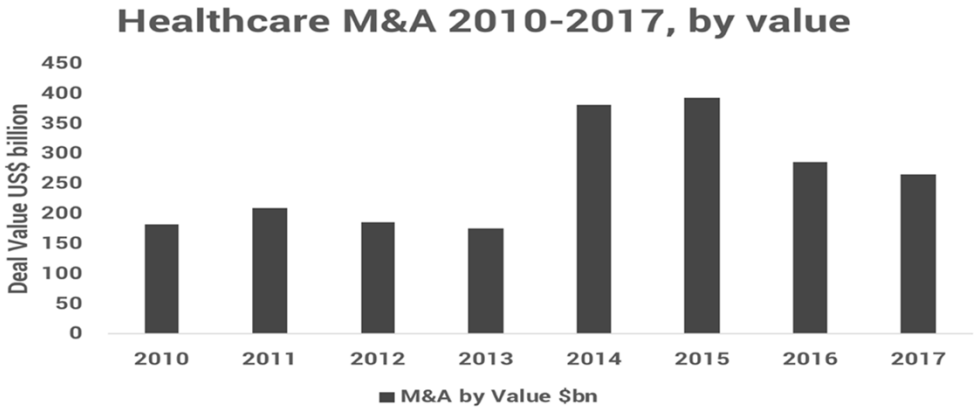

IF YOU HAVEN'T BEEN INVOLVED IN A MERGER OR ACQUISITION YET…CHANCES ARE, YOU WILL BE…SOON

24

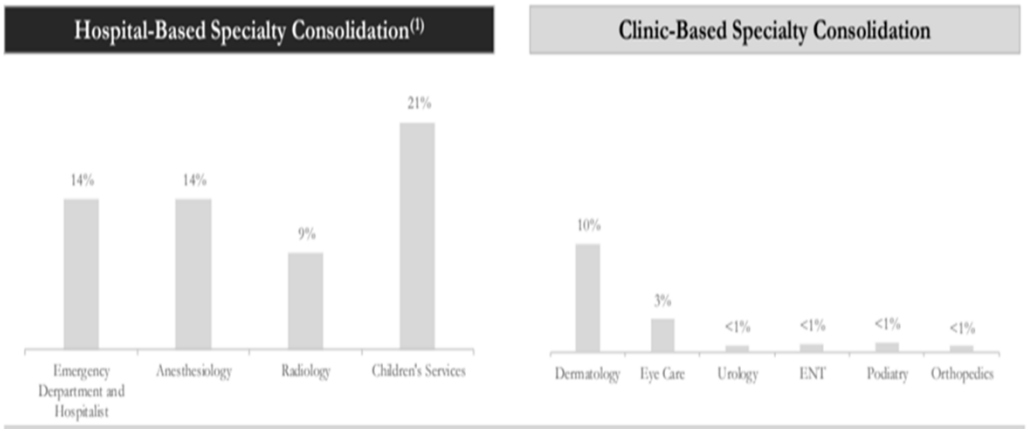

CONSOLIDATION AMONG PHYSICIAN SPECIALTIES

25

EXISTENTIAL QUESTION

- When does CCO's involvement start?
  - The day negotiations ended and due diligence begin…

    OR
  - The day the deal closes?

26

RISK-BASED DUE DILIGENCE

- Governmental enforcement cases and internal investigations focus on discovered conduct that may be a violation. The work required includes reviewing and producing many documents and interviewing many witnesses. This process can take many months and even years.
- in contrast, risk-based internal compliance due diligence attempts to identify the compliance risk areas of a target in a relatively short period of time – often with limited access to critical documents and personnel.
- The risk assessment should focus on the following:
  1. The nature of the target's business and reputation in the market.
  2. The industry and the States in which the target operates.
  3. The extent to which the target is exposed to certain compliance risk areas and how it approaches compliance in these areas.
  4. The extent to which the target utilizes third parties in dealing with customers and regulators.
  5. ***The extent to which the target interacts with government officials or has government customers.***
  6. The strength of the target's existing compliance program and internal controls.

27

M&A INTEGRATION CYCLE

28

PHASE I:
PRE-ACQUISITION PREPARATION

- Corporate business strategy
  - 1-3/5 yr plan – insight into acquisition strategy
  - Better prepared for coming requirements (e.g., distribution/ development of resources, budgeting, etc.)
- Coordination with M&A and Business Development Teams
  - Compliance red flags awareness
- Working with M&A Counsel
  - Going beyond the standard disclosure checklist
  - Compliance-related terms of agreements – beyond liability/ disclosure
  - Privacy, data protection
- Access to M&A data room

29

PHASE 2: DISCLOSURE & PRE CLOSE DATE

- Compliance representations to M&A and integration teams
- Business evaluation:
  - Strategy and objectives for a newly acquired practice
- Compliance & Risk evaluation
  - Role of acquired practice & its impact on compliance analysis
  - Evaluate new regulatory market requirement vis-à-vis current program
  - Review available documentation (P&Ps, procedures, processes, et al)
- Assess potential project management impact
  - External expertise specific to market
  - Cross-functional team participation
  - Budgetary requirements

30

COMPLIANCE CULTURE COLLISION

- Recognize corporate culture differences
- Same industry vs. new LOB
- Hierarchical vs matrix-managed
- Formal vs. informal
- Transparent vs. closed

31

COMPLIANCE CULTURE COLLISION

- "It is a marathon and not a sprint"
- No overnight success but ongoing change management
- Education, training, communication starting with acquired practice leadership
  - Acknowledge value by adopting best practices
  - Trust building through transparency

32

RISK ASSESSMENT MATRIX

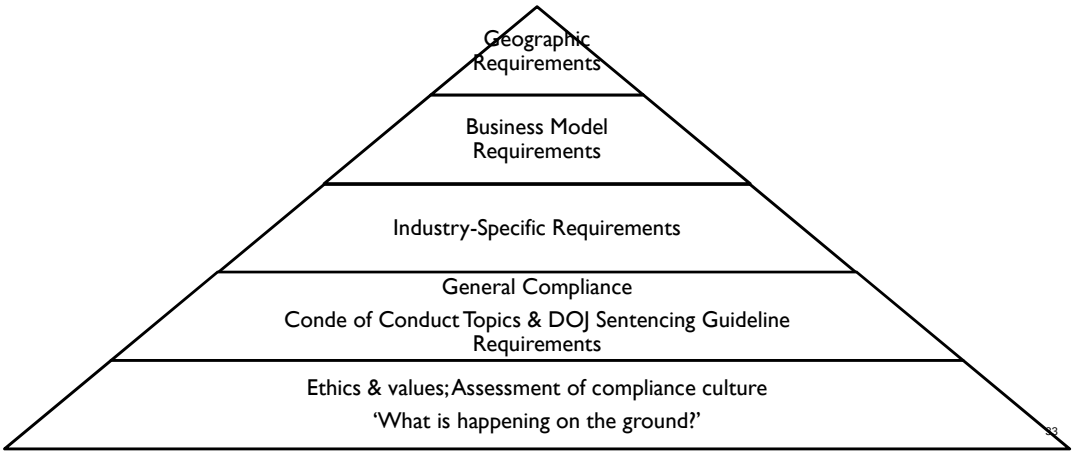

33

PHASE 3: RISK AREAS TO CONSIDER

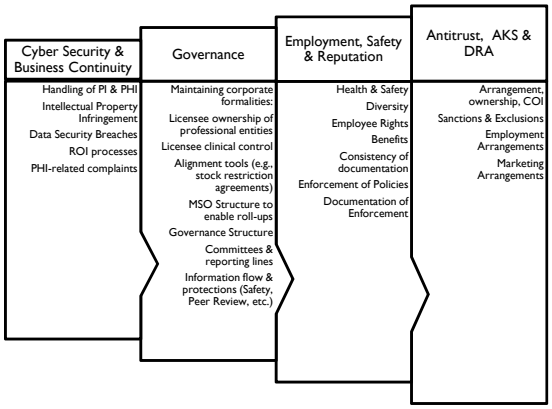

34

PHASE 4: WE HAVE FINDINGS…NOW WHAT?

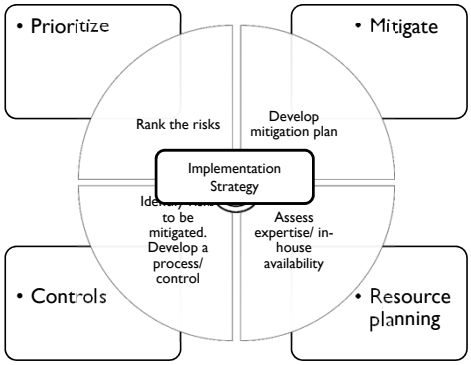

35

PHASE 4: IMPLEMENTATION TIMELINE

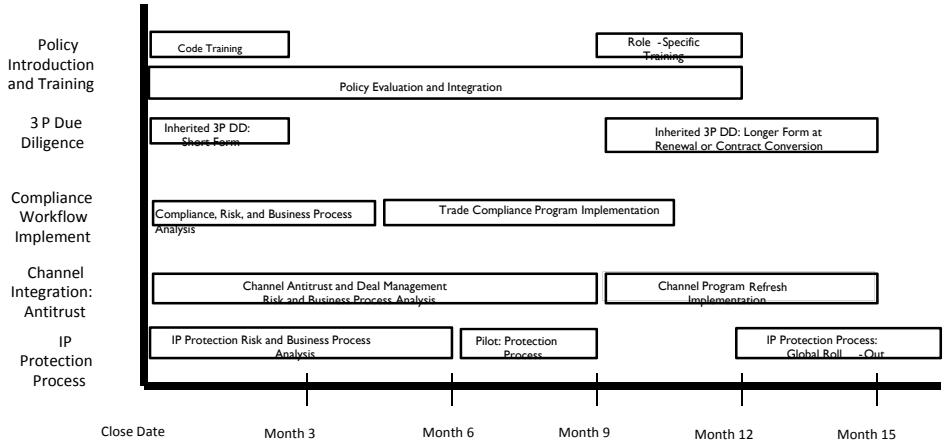

36

ROADBLOCKS

Messaging
- Disconnect between corporate and field/ change management
- Combatting 'this doesn't apply to us' mentality
- Communication methods are not effective within newly acquired company culture

"Growth Pains" of Integration
- Organization integration challenges
- Possible implementation delays due to organization shift of priorities
- Business process reconciliation and changes
- Budgetary constraints

Strategy Alignment
- Competing priorities and action paralysis
- Pressure of maintaining/ growing business while implementing changes
- Fear of re-organization or job loss @ acquired facilities

Adjusting Controls
- System and data access and integration
- Access – for new process use versus data captured in order databases
- Providing employees access and training to critical tools
- Impact of delay on management and monitoring of critical systems, automated processes

Reality
- All the while seeing patients, doing surgeries, etc.

37

PHASE 5: MONITOR, MEASURE, MANAGE

- **Developing KPIs for Integration Efforts**
- Quantitative (targets and timeline)
- Qualitative (reduction in issues)
- Experiential (feedback)
- BUT, recognize contingencies to success

38

VALUE OF POST MORTEM

- Analysis successes and failures
- Promoting successes
- Continuous quality improvement & efficiencies

39

HYPOTHETICAL CASE STUDY

Physician Corporation, PC ("PC"), headquartered in Doctortown, New Physician State, is a multi-state multi-specialty practice with a few ASC locations. New Physician State is a corporate practice of medicine state.

Situation:

As a result of health concerns and estate planning needs, the founder and majority shareholder and a few minor physician-shareholders were seeking liquidity for their investment while finding a partner to help PC grow. PC therefore sought out Money Fund ("MF"), a private equity fund, to provide capital, enable certain exits, and allow the PC to grow.

MF is willing to buy PC, so long as MF can have control of the practice.

Challenges:

Certain current physician shareholders of PC want to retain management control. The Company's rapid growth in its ten years of existence presented numerous financial management challenges. The Company made several significant changes to its management team.

MF does not have any physician owners. PC wants to retain its current payor contracts and hospital service agreements.

Successful Solution:

PC spins out a management services organization ("MSO"), wholly owned by PC's owners. MSO sells majority ownership to MF, but retains certain ownership of MSO for non-retiring PC owners. PC, which only employs clinicians, retains most of its ownership, except for retiring physicians.

The Managed Services Agreement clearly define roles and responsibilities of the parties and outline boundaries of MF decision-making related to clinical practice processes.

40

POLICIES TO CONSIDER

- Defined Governance Structure
  - Structure of Committees
  - Committee Charters and Membership
- Conflict of interest policies
- HIPAA privacy
- Standards for conduct
  - Code of Conduct
  - Employee Handbook and related HR policies
  - Centralized training on core corporate principals
- Regulatory reporting requirements (state or federal privacy reporting requirements, state licensing requirements)

41

QUESTIONS?

Daniel Meier, JD, CHC
Partner, Benesch, Friedlander, Coplan & Aronoff
201-488-1013
dmeier@beneschlaw.com

Regina Gurvich, MBA, CHC, CHPC
CCO, OMNI Opthalmic Management Consultants
732-510-2588
Regina.Gurvich@oomc.com

42